UNIT-V

# Power Amplifiers

* Introduction:- The power Amplifiers are the Amplifiers which rise the power levels of the signal.

- The power Amplifier may also defined as, a device which converts dc power to Ac power and whose action is controlled by the Ac i/p signal.
- Power Amplifiers doesnot Amplify the power, infact that power Amplifiers takes power from the dc power supply and converts it's into useful Ac signal power.
- These are also known as large signal Amplifiers.

* classification of power Amplifiers:-

- The transistor biasing condition, amplitude of the input signal & conduction period of transistor decides the classification of power Amplifier.

1. class 'A' power Amplifier
2. class 'B' power Amplifier
3. class 'C' power Amplifier
4. class 'AB' power Amplifier.

(i) class 'A' power Amplifier:- It is an amplifier in which the transistor is biased, the output current flows for the complete cycle for input signal. The transistor is

The efficiency of class 'A' power Amplifier is 25-50%.

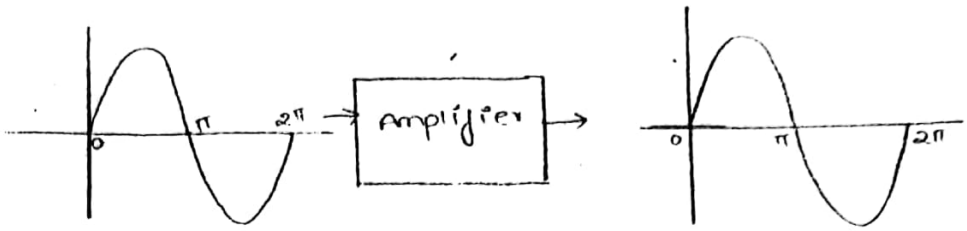


(2) class 'B' power Amplifier:-

It can be defined as, an Amplifier in which the transistor biased such that the output current flows for only one half cycle of the input signal.

- The transistor biased at cut off region
- efficiency is 78.5%

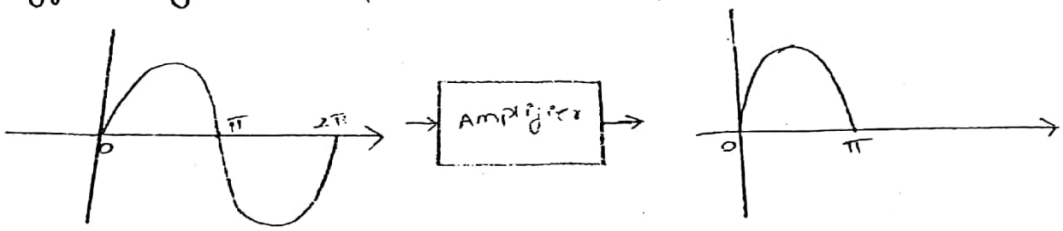


(3) class 'C' power Amplifier:-

It is an amplifier, in which the transistor biased such that output current flows for less than half cycle of the input signal.

- The transistor is biased beyond the cut-off region
- The efficiency is high (99 (or) 100%)

Scanned by CamScanner

## class 'AB' power Amplifier:-

The class AB power Amplifier characterized lies between class A & class B Amplifiers. In a class AB power Amplifier the output current flows for more than half cycle but less than full cycle.

- efficiency is 50 - 78.5%.

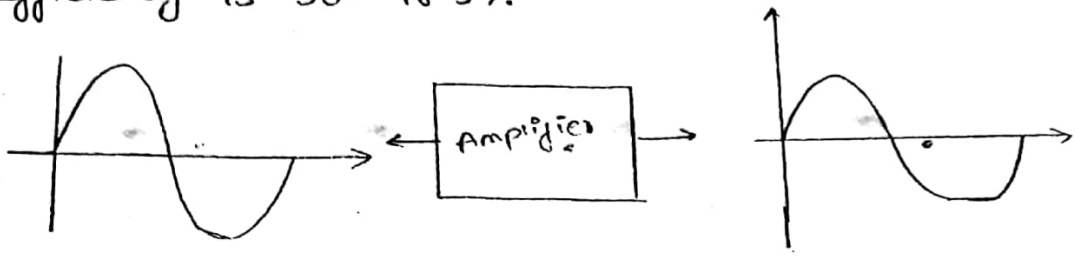


## class A power Amplifier:-

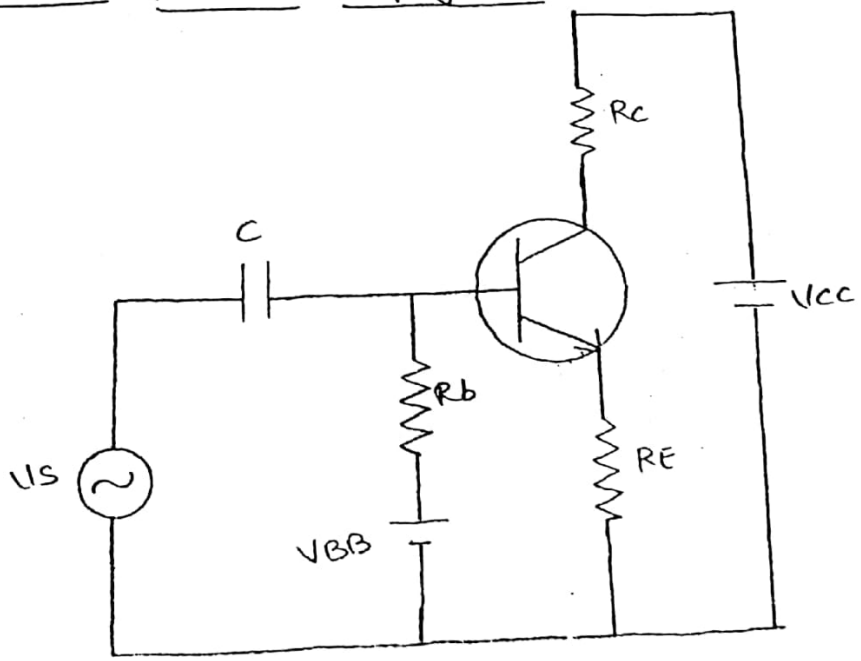


class 'A' direct coupled Amplifier

Scanned by CamScanner

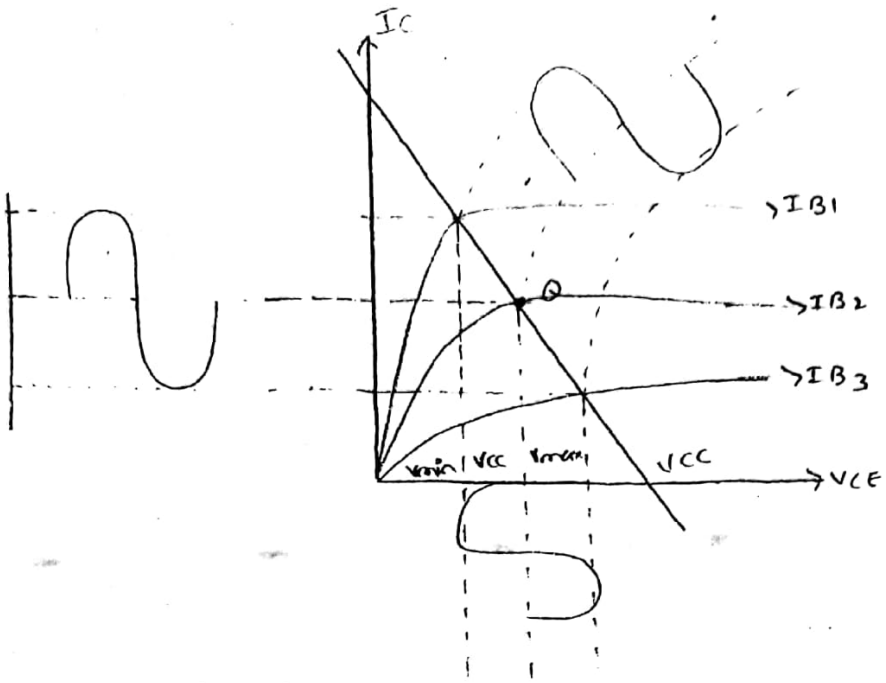


- when Ac i/p signal is applied to the base of the transistor is biased in such away that the o/p current flows for entire Ac cycle.
- In this case the operation of amplifier as restricted to small center region of load line i.e 'Q' point is selected at the center of the load line. so it can be operate in the linear region.
- If the transistor is operates in linear region, the output wave form is similar to the i/p signal.
- when an Ac input signal is applied at the base of the transistor the o/p will be varied from it's dc bias point, (and output will be varied from its dc bias point) and output current (or) voltage reaches minimum & maximum values.
- If the i/p sig is large signal the Q-point is shifted to cut off region (or) Saturation region and here it is Produce, amplitude distortion.

Scanned by CamScanner

- If the i/p sig is absent due to the biasing voltage the power is wasted in the form of heat across the load Resistor($R_L$)
- If $R_L$ is very high still the power dissipation is more, then the efficiency of amplifier is very low (<25%)
- To avoid this problem, instead of load resistor transformer may be use.
- It helps to improve the efficiency (50%)

Analysis:-

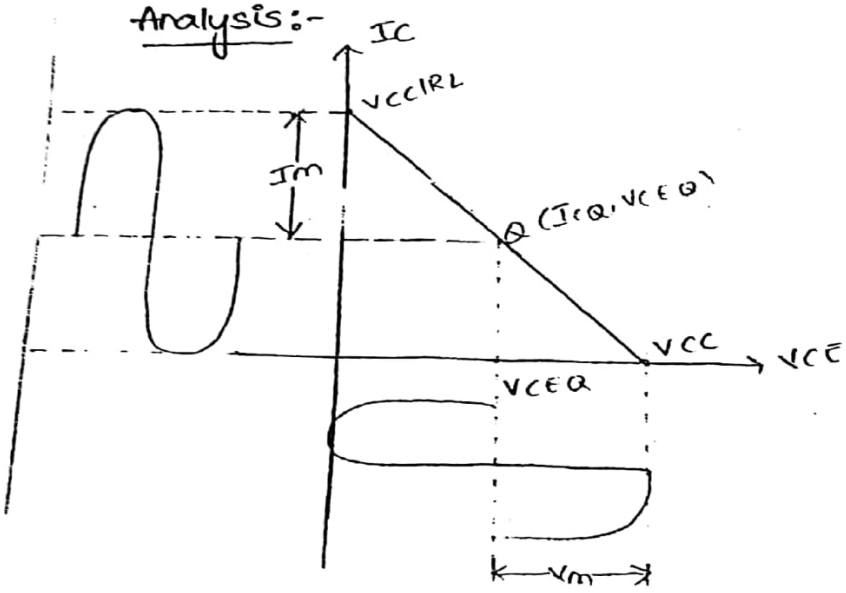


- Here, the static o/p characteristics are considereded and the output power given by

$$P = V_c \cdot I_c$$

(or)

$$P = I_c^2 R_L$$

where $V_c$ & $I_c$ are rms values of the output voltage and current respectively.

Scanned by CamScanner

$$I_c = \frac{I_{max} - I_{min}}{2\sqrt{2}} = \frac{I_m}{\sqrt{2}} = \frac{I_{pp}}{2\sqrt{2}}$$

$$\therefore I_m = \frac{I_{pp}}{2}$$

$$V_c = \frac{V_{max} - V_{min}}{2\sqrt{2}} = \frac{V_m}{\sqrt{2}}$$

and power in Ac

$$P_{o(AC)} = V_c \cdot I_c$$

$$= \frac{V_m}{\sqrt{2}} \cdot \frac{I_m}{\sqrt{2}}$$

$$P_{o(AC)} = \frac{V_m I_m}{2}$$

power in dc

$$P_{in(dc)} = V_{dc} \cdot I_{dc}$$

$$= V_{CC} \cdot I_{CQ}$$

$$\text{efficiency } (\eta\%) = \frac{P_{o(ac)}}{P_{in(dc)}} \times 100$$

$$= \frac{\frac{I_m \cdot V_m}{2}}{V_{CC} \cdot I_{CQ}} \times 100$$

$$= \frac{\frac{I_{CQ} \cdot V_{CEQ}}{2}}{2V_{CEQ} \cdot I_{CQ}} \times 100 \qquad [\because V_{CC} = 2V_{CEQ}]$$

$$= \frac{I_{CQ} \cdot V_{CEQ}}{4V_{CEQ} \cdot I_{CQ}} \times 100$$

$$= \frac{1}{4} \times 100$$

$$\eta = 25\%$$

Scanned by CamScanner

## Harmonic Distortions:-

- The harmonic distortion means the extra presence of the frequency components in the output wave form which are not present in the i/p signal.
- The component with frequency same as the input signal is called fundamental frequency component.
- The additional frequency components present in the o/p signal, which are integer multiples of the fundamental frequency component.
- These components are called harmonic components (or) harmonic distortion:

## Class 'B' push pull Amplifier:-

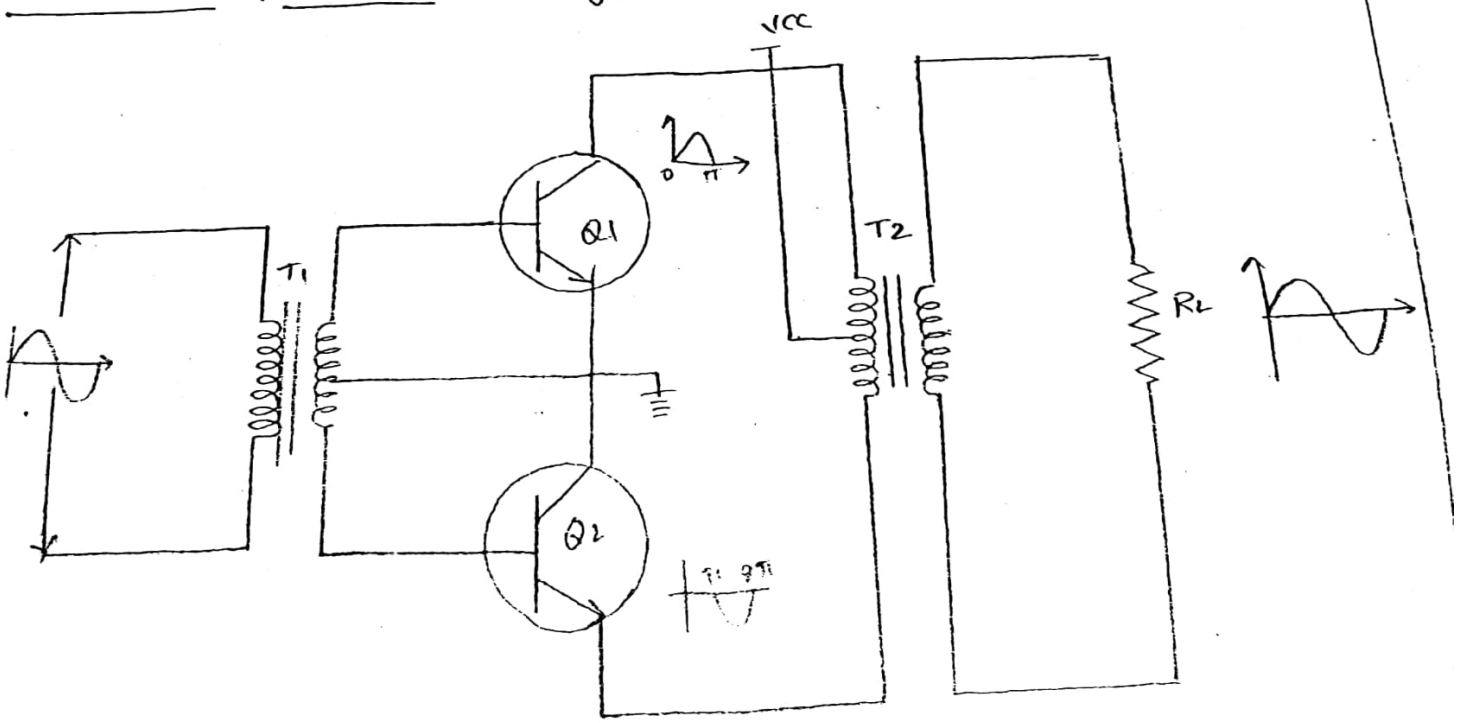


Scanned by CamScanner

$$I_c = \frac{I_{max} - I_{min}}{2\sqrt{2}} = \frac{I_m}{\sqrt{2}} = \frac{I_{pp}}{2\sqrt{2}}$$

$$\boxed{\therefore I_m = \frac{I_{pp}}{2}}$$

$$V_c = \frac{V_{max} - V_{min}}{2\sqrt{2}} = \frac{V_m}{\sqrt{2}}$$

and power in AC

$$P_o(AC) = V_c \cdot I_c$$

$$= \frac{V_m}{\sqrt{2}} \cdot \frac{I_m}{\sqrt{2}}$$

$$P_o(AC) = \frac{V_m I_m}{2}$$

power in dc

$$P_{in}(dc) = V_{dc} \cdot I_{dc}$$

$$= V_{cc} \cdot I_{CQ}$$

$$\text{Eff}(\eta) = \frac{P_o(ac)}{P_{in}(dc)} \times 100$$

$$= \frac{\frac{I_m V_m}{2}}{V_{cc} \cdot I_{CQ}} \times 100$$

$$= \frac{\frac{I_{CQ} \cdot V_{CEQ}}{2}}{2 V_{CEQ} \cdot I_{CQ}} \times 100$$

$[\because V_{cc} = 2V_{CEQ}]$

$$= \frac{I_{CQ} \cdot V_{CEQ}}{V_{CEQ} \cdot I_{CQ}} \times 100$$

$$= 50$$

Scanned by CamScanner

- The magnetic flux setup by these current will flows in opposite direction so net flux is zero.
- when the positive half cycle of input signal is applied, base of $Q_1$, becomes positive, making transistor $Q_1$ ON and base of $Q_2$ negative thereby $Q_2$ is OFF.
- when the negative half cycle is applied, $Q_1$ is OFF and $Q_2$ is ON, so at any instant only one transistor is conducting.

The output transformer combines these two halves and produce a full size sine wave in the load Resistor. By joining two transistors, it is never perfect and hence output is distorted.

Analysis:- The Dc input power applied to the circuit

$$P_{in(DC)} = V_{cc} \cdot I_{dc}$$

$$I_{dc} = \frac{I_m}{\pi}$$

$$P_{in(dc)} = \frac{V_{cc} \cdot I_m}{\pi} \quad \text{for 1 transistors}$$

$$\boxed{P_{dc} = \frac{2V_{cc} \cdot I_m}{\pi}} \quad \text{for 2 transistors}$$

The Ac output power obtained across the load

$$P_{o(ac)} = V_{rms} \cdot I_{rms}$$

$$= \frac{V_m}{\sqrt{2}} \cdot \frac{I_m}{\sqrt{2}}$$

$$\boxed{P_{o(ac)} = \frac{V_m I_m}{2}}$$

Scanned by CamScanner

Circuit description:-

- class 'B' push pull amplifier, consists of two centre tapped transformers $T_1$ and $T_2$ and two identical transistors $Q_1$ and $Q_2$
- $T_1$ is the input transformer and is also called as phase splitter. This produces two signal voltages which are 180° out of phase with each other.
- These two signal voltage with opposite polarity drives the input of transistors $Q_1$ and $Q_2$. $T_2$ is the output transformer couples ac output to load.

Operation:-

- The transistors $Q_1$ and $Q_2$ are biased at cutoff.
- This is done by keeping zero base on each transistor bias which is achieved by connecting emitter and base terminals together.
- To have balanced circuit, two emitters are connected to the centre tap of $T_1$ secondary and $V_{cc}$ supply to centre tap of $T_2$ secondary.
- when there is no input signal $Q_1$ and $Q_2$ are cut off, hence no current drawn from $V_{cc}$ supply, thus no power dissipation due to both the transistors.
- If transistor operated slightly above cut off points, transformers operate in zero flux. This is because of the transistor bias currents flows in opposite direction.

Scanned by CamScanner

## Complementary symmetry class 'B' push pull Amplifier

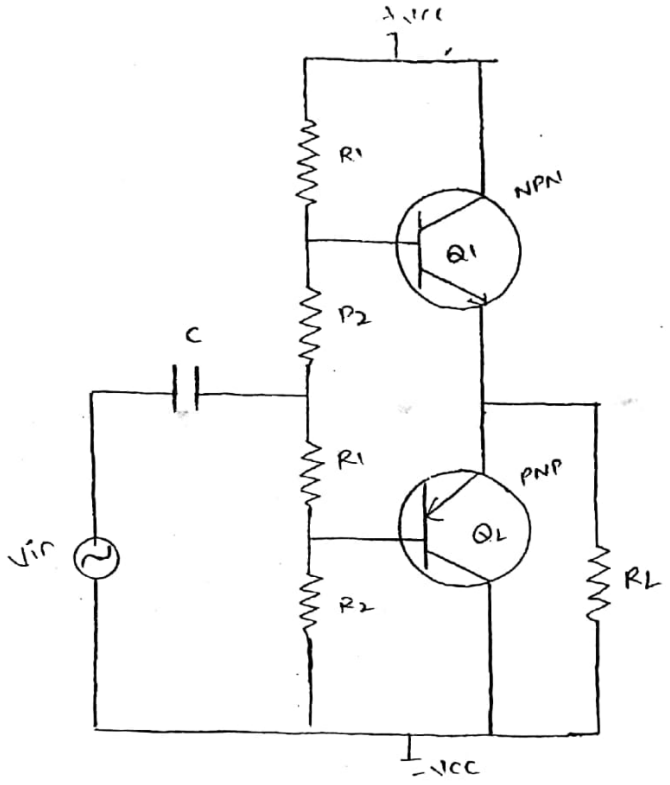


In this circuit, the "complementary" means the circuit uses two identical transistors but one is NPN and the other is PNP. The "symmetry" means the biasing resistors connected in both transistors are equal. As a result of this emitter base junction of each transistor is biased with the same voltage.

During the +ve half cycle of ac input the base emitter voltage of both transistor becomes positive. Under this condition, only the NPN transistor conducts, while the PNP transistor is cut off. During the process +ve half cycle current flow through $R_L$.

Scanned by CamScanner

Hence overall efficiency

$$\%\eta = \frac{P_{o(ac)}}{P_{in(dc)}} \times 100$$

$$= \frac{\frac{V_m I_m}{2}}{\frac{2V_{cc} \cdot I_m}{\pi}} \times 100$$

$$= \frac{\frac{V_m I_m}{4}}{\frac{V_m \cdot I_m}{\pi}} \times 100$$

$$= \frac{\pi}{4} \times 100$$

$$\boxed{\%\eta = 78.5\%}$$

Advantages:-

(1) The efficiency is much higher than class 'A' operation

(2) If the input signal is absent, there is no power dissipation.

(3) Due to the push pull connection all even harmonics are canceled thus it reduces the harmonic distortion.

(4) Due to the transformer coupling, it provides proper impedance matching.

(5) Due to the centre tapped transformer used, ripples present by the supply get eliminated.

Disadvantages:-

1. Two centre tapped transforms are needed
2. The transformer make the circuit bulky and costly.
3. Frequency response is poor.

Scanned by CamScanner

Advantages :-

1. Due to absence of transformer, the weight, size and cost are less
2. frequency response is improved
3. Due to collector configuration, impedence matching is possible.

Disadvantage :-

1. It produce the cross over distortion.

differences between push pull class B & complementary class'B'

| push pull class B | Complementary symmetry class'B' push pull. |
|---|---|
| Both transistors are similar either PNP(or) npn. | Transistors of complementary system, i.e one npn other Pnp. |
| The transformer is used to connect the load as well as input. | The ckt is transformer less |
| he impedence matching is possible due to o/p transformer | The impedence matching is possible due to common collector ckt. |
| frequency response is poor. | frequency response is improved. |
| due to the transformer the ckt is bulky, costly and heavier. | As transformer less, the ckt is not bulky & costly |
| dual power supply is not required | dual power supply is required |
| efficiency is higher than class'A' | efficiency is higher than push pull |

Scanned by CamScanner

**Class AB Amplifier:-** The circuit for class 'AB' amplifier is shown in figure. In this case the voltage drop across $R_2$ is so adjusted that the collector current flows for less than one cycle but more than half cycle of input signal. Thus the distortion in AB amplifier is less than class 'B' amplifier. Class 'AB' operation is particularly suitable for minimizing the crossover distortion caused by non linearity of input characteristic.

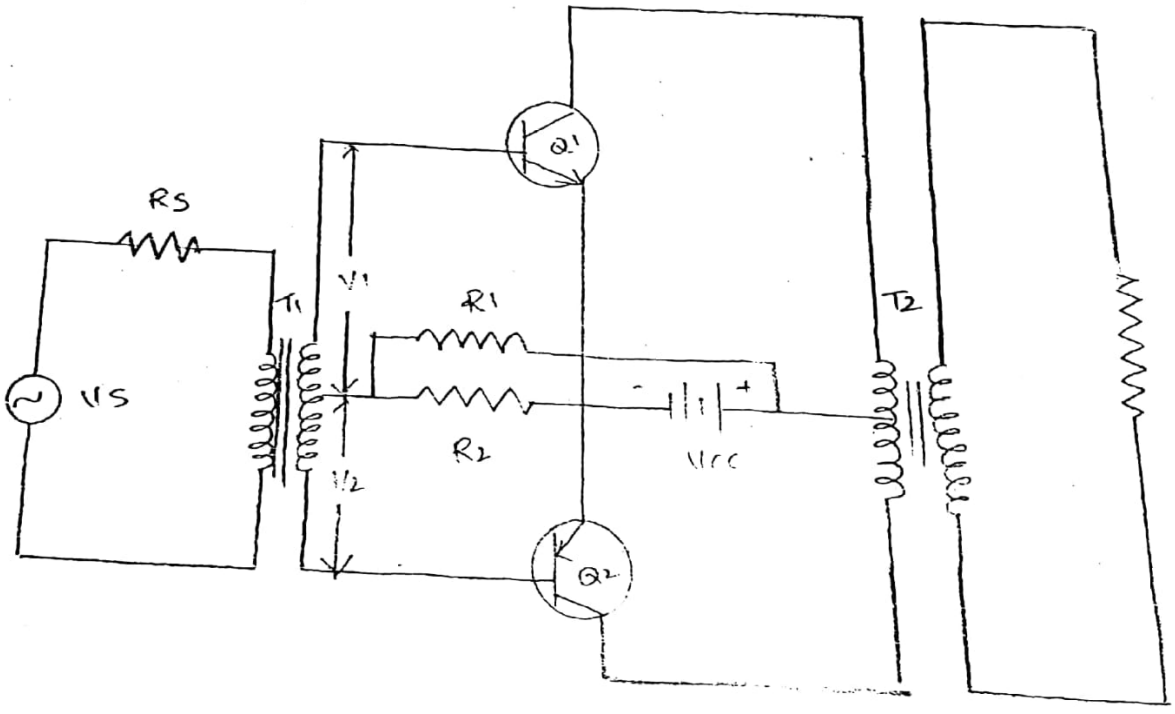


No appreciable base current flows until the emitter junction is forward-biased by cut in voltage $V_\gamma$. Under these circumstances a sinusoidal base-voltage excitation will not result in a sinusoidal output current.

Scanned by CamScanner

we know the output is proportional to the base current. The figure shows that the output current is small when $V_i < V_\gamma$. Thus the output is deviated from the linear characteristics. This distortion is called as "cross over distortion".

Thermal stability :-

once the maximum power to be delivered to the load and the anticipated temparature range are known, the power rating of the transistor can be determined and the transistor can be selected.

The maximum allowable collector dissipation is usually less than the maximum rating specified for the transistor. Design and transistor specification will include, $i_{cmax}$, $BV_{CEQ}$, and $P_{cmax} = V_{CEQ} \cdot I_{CQ}$.

This maximum rating process on the permissible operating region of the transistor, For saje operation the 'Q' point must lie on or below the hyperbola.

Scanned by CamScanner

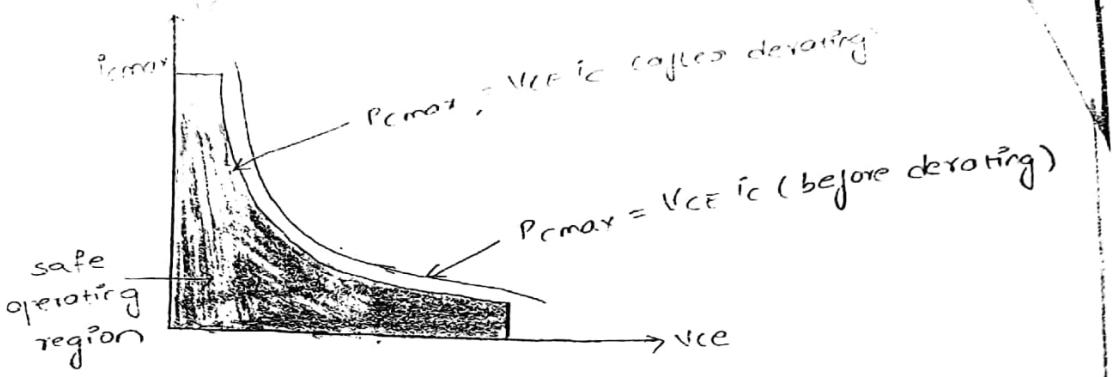


Heat sink :- The maximum power handled by the transistor and the temperature of the transistor are closely related because, if the junction temperature increases due to power dissipation, then the collector power dissipation $P_d = V_{CE} \cdot I_C$

Let $T_j$ junction temperature due to power dissipation.

If the temperature keeps on increasing, at a certain temperature, the crystal structure of the device is destroyed and there is no chance of recovery thus the manufactures specify the maximum limit of temperature variation of semiconductor i.e $-65^{\circ}C \leq T_j \leq T_{j(ma}$

To avoid damaging of transistor, a heat sink may be connected with transistor. The heat sink is a mechanical device which provides a large surface area to dissipate the power in the form of heat. Due to the heat sink, the power handling capacity of the transistor can approach the related maximum value and it causes the temperature of the transistor case to be lowered.

Scanned by CamScanner

## Distortions in Amplifiers:-

1) frequency distortion
2) phase distortion
3) Amplitude (or) non-linear distortion
4) Harmonic Distortion
5) cross over distortion
6) Intermodulation distortion.

(1) **frequency distortion:-** The gain of the amplifier is constant over a certain range of frequency band and reduces sharply in the low and high frequency regions as shown in figure. This causes distortion of the output signal called 'frequency distortion'.

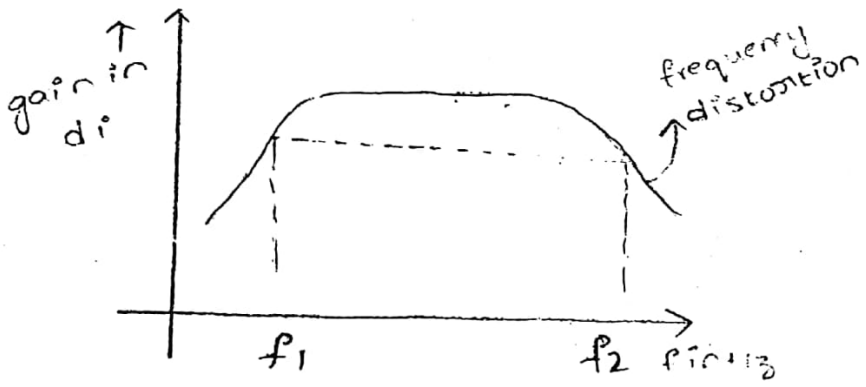


(2) ~~This type~~

**phase distortions:-** This types of distortions occurs in a small signal amplifiers because of various frequency components of a signal undergoing different phase shift. The figure clearly shows, the third harmonic is assumed to undergo the phase reversal compared to the fundamental one.

Scanned by CamScanner

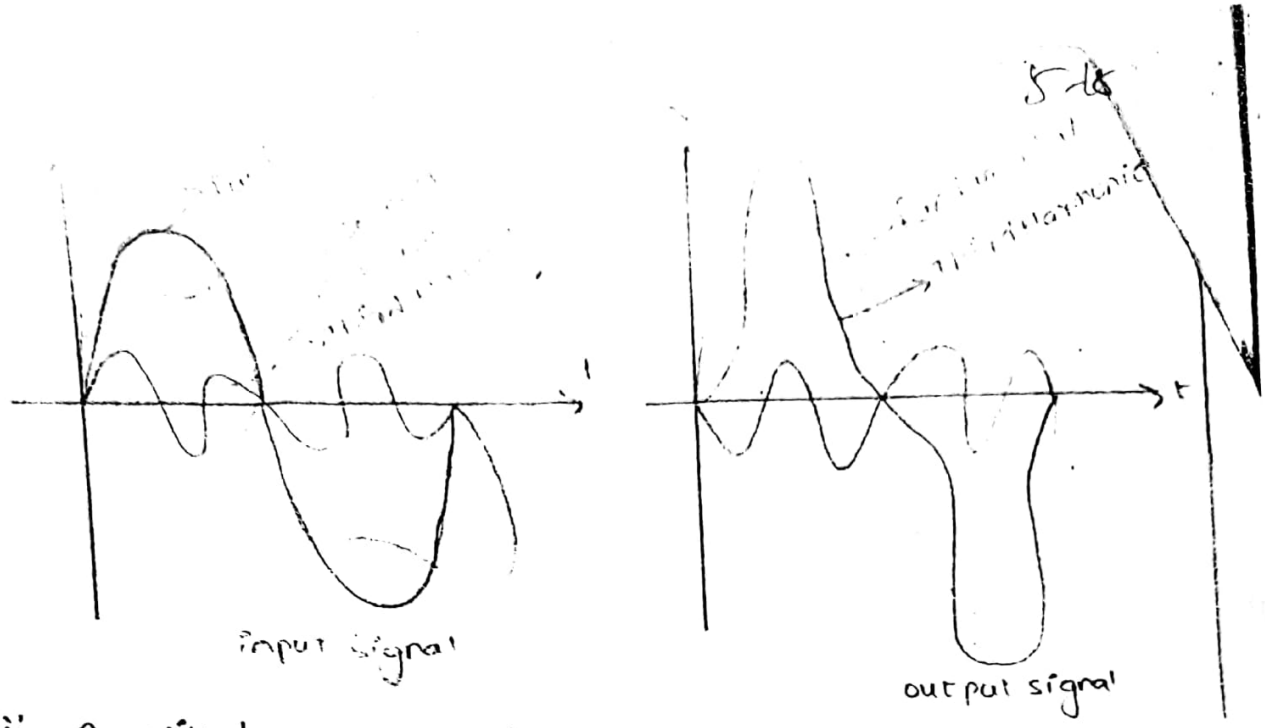


iii) Amplitude or Non linear distortion:-

If the signal excursion enters in a non-linear region (because of large amplitude of the signal) then distortion occurs in the output such a distortion is called "amplitude (or) non linear distortion", shown in figure.

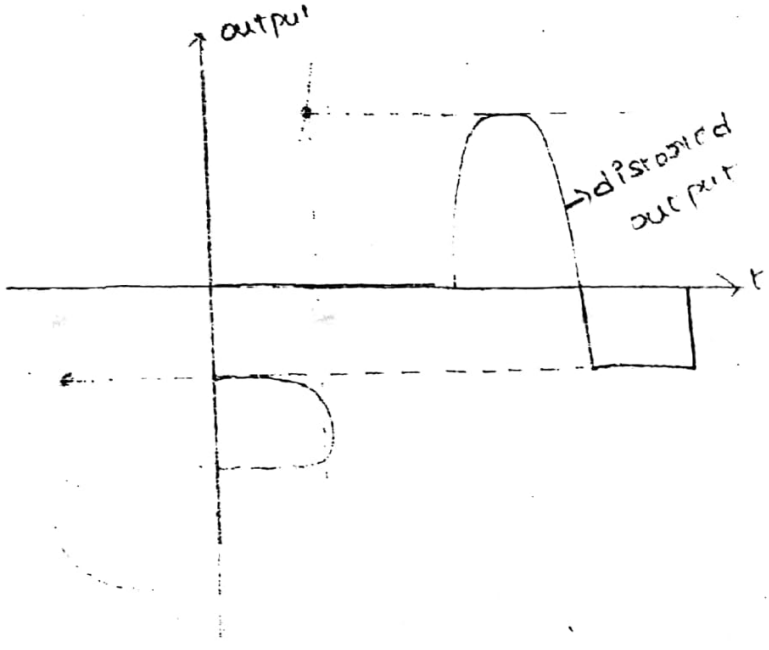


Scanned by CamScanner

3) Harmonic distortion:- when a input signal is applied to a transistor, the non-linear characteristic causes the positive half of the signal to be amplified more than -ve half cycle. Due to this the output signal consists a dc components and frequencies which are integral multiplies of the input signal frequency called "harmonics". Hence the output is said to be distorted, this distortion is called as "harmonic distortion".

4) cross over distortion:- In class 'B', both transistors are biased at cut off region because dc bias voltage is zero. So input signal should exceed the barrier voltage to make the transistor conduct otherwise a transistor doesn't conduct. So there is a time interval between +ve and -ve alterations of the input signal when neither transistor is conducting. The result distortion in the output signal is "cross over distortion" and shown in figure.

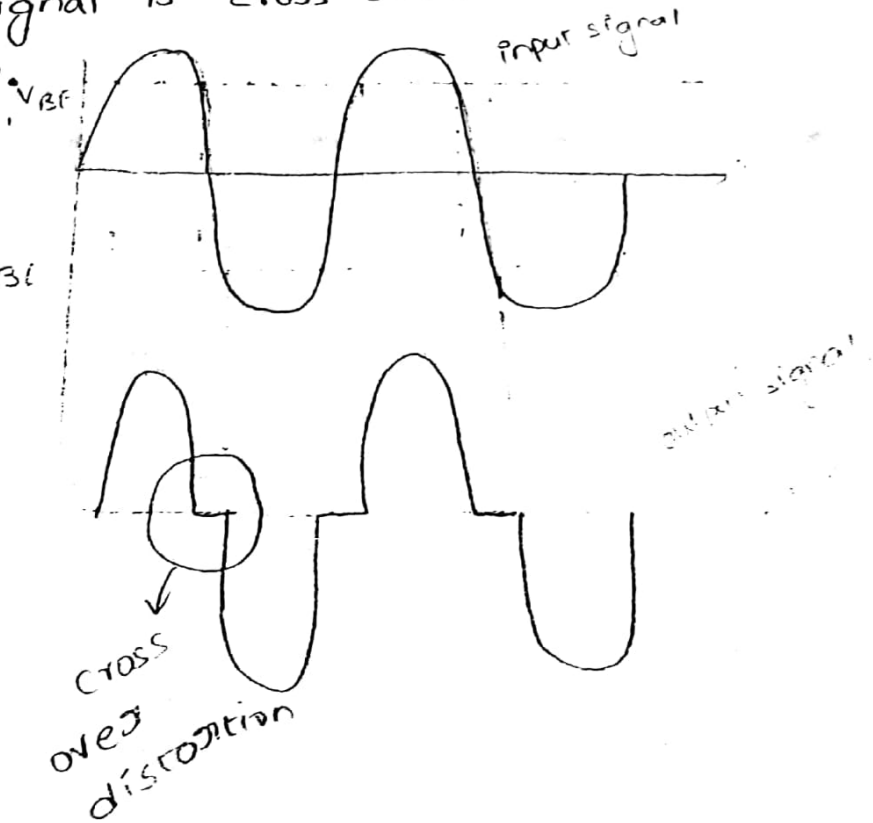


Scanned by CamScanner

(vi) Intermodulation distortion:-

It occurs when input signal consists of more than one frequency. It is also the type of non-linear distortion which generates frequency components not harmonically related to the signal frequencies.

Suppose an input signal contains two frequencies $f_1$ & $f_2$. The output signal will contain the harmonics such as $f_1, 2f_1, 3f_1, ----$ and $f_2, 2f_2, 3f_2, -----$ In addition there would be components of sum and difference of harmonics such as $(f_1 \pm f_2)$ and $(2f_1 \pm 2f_2)$ and so on. These sum and difference frequencies are called as "Intermodulation" frequencies and are quite undesirable in amplifiers. This type of signals are called as intermodulation distorted signals.

Scanned by CamScanner

## Class 'c' power Amplifier:-

class c power amplifier is designed to conduct only over a small part of 'positive half cycle of the input waveform. Referring to figure of a class 'c' amplifier, the negative supply voltage VBB connected to the base circuit reverse biases the base-emitter junction so that it will conduct only when input signal exceeds the reverse bias. As a result, the collector current $I_C$ will be in the form of pulses. Hence the class c amplifier is not used in the audio frequency but used in the radio frequency range. The tank circuit connected to the collector of the amplifier restores the sine wave of the input signal, but complex audio waveform and rectangular wave forms cannot be restored.

class 'c' amplifiers are designed to ensure small conduction angle in order to maintain high efficiency. Hence a signal biasing arrangement is used to so that the conduction angle is maintained constant irrespective of varying amplitude of input signal, As shown in figure, the conduction angle is less than 90° for small input signal and more than 120° for large input signal. Conduction angle more than 120° is too large and amplifier efficiency will decrease. since large currents overheat the transistor, signal biasing is used to overcome the problem and maintain the constant conduction angle.

Scanned by CamScanner

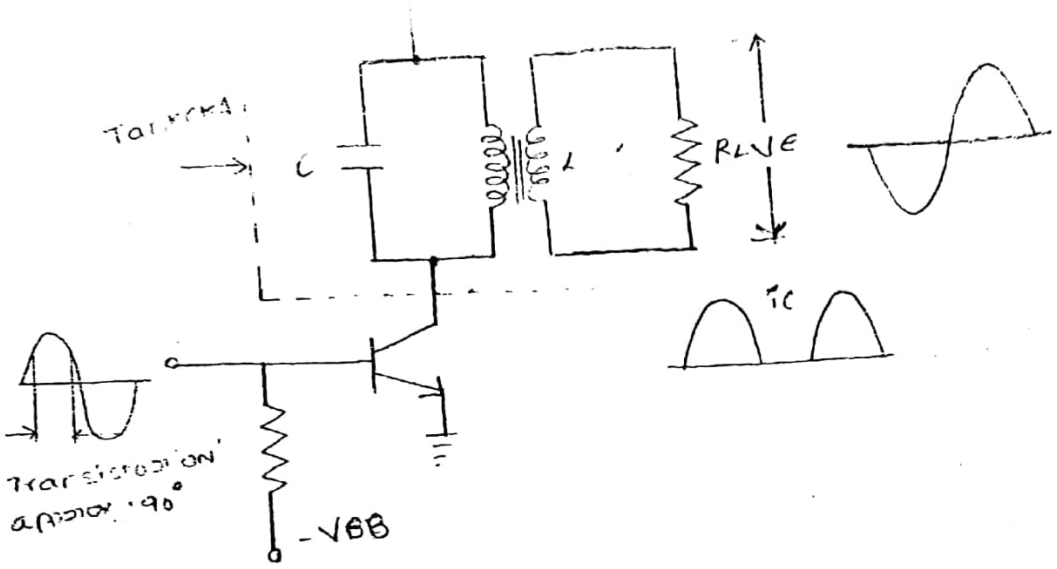


## Class C Amplifier

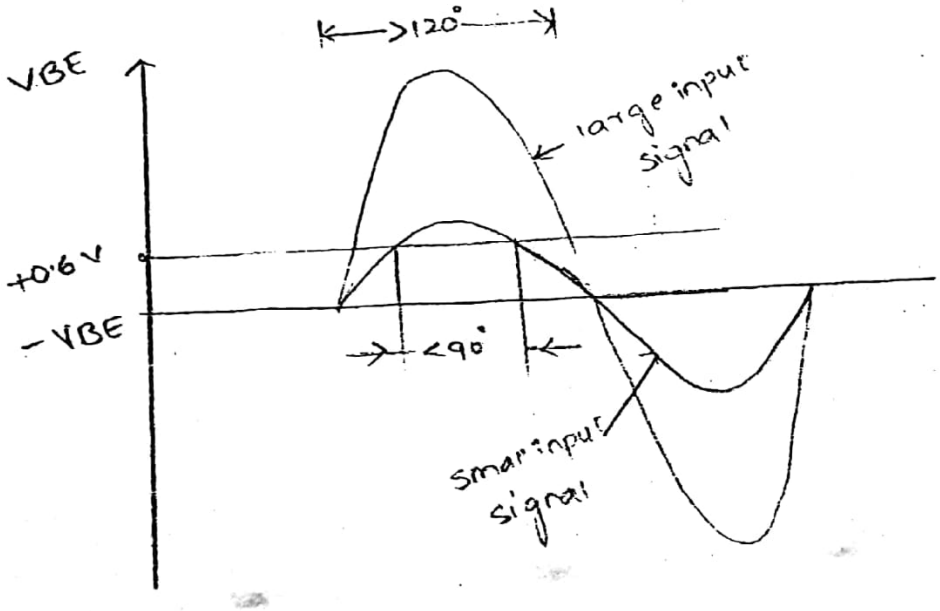


Scanned by CamScanner

Advanced power Amplifiers:



## Class D Amplifier:-

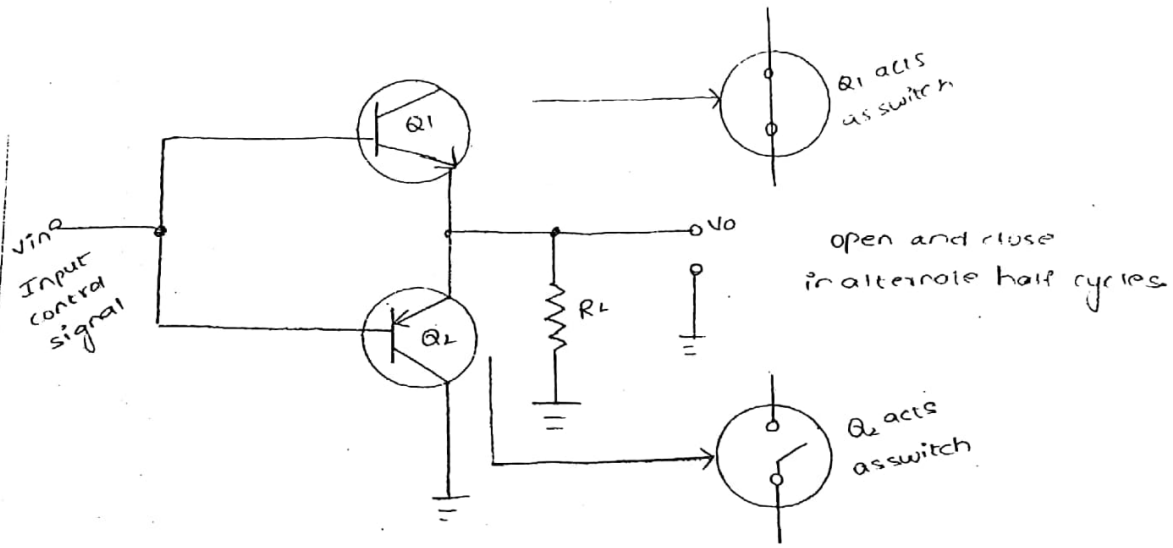


The figure shows basic concept of class D amplifier. The amplifier consists of two complementary symmetry transistor driving a Load $R_L$. This means one transistor is p-n-p and other is n-p-n.

The transistors are biased in such a way that they beha as ideal switches. when transistor is ON, it is biased to saturation so that voltage across it is zero while current is high. When transistor is OFF, it is biased to cut off so that current through it is zero while voltage is high. Thus when input goes positive negative, $Q_2$ conducts heavily acting as closed switch while $Q_1$ is OFF. Thus the load voltage $V_0$ across $R_L$ has one of two possible values which [illegible] type of digital [illegible]

the transistors dissipate almost zero power as in any of the states, either voltage is zero (or) current is zero for the transistors. Thus entire power input is available to the load. Hence efficiency of class 'D' amplifier is almost 100%. The figure of merit which is the ratio of the maximum power dissipated in transistor to that delivered to the load, is zero. These facts make the class D amplifiers as an ideal amplifier.

Practically class D amplifiers are designed to operate with digital (or) pulse type of signals. The basic block diagram of unit used alongwith class D amplifier in the application circuits is shown in figure.

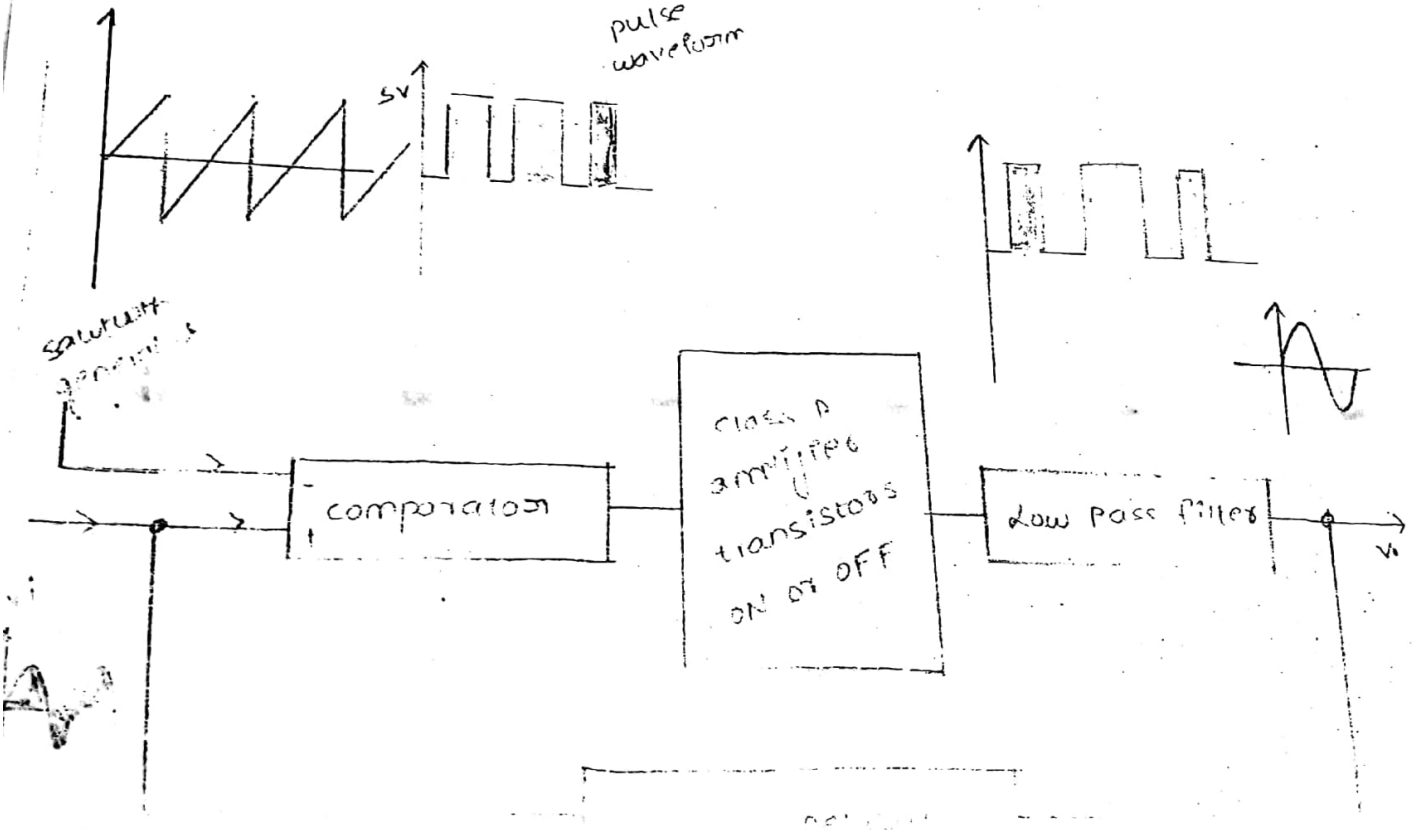


Scanned by CamScanner

Scanned by CamScanner

## Class 'S' power Amplifier



The basic principle of class S amplifier includes the following operations.

1. The input is pulse-width modulated signal
2. The pulses are amplified by high efficiency pulse amplifier like class D amplifier.
3. The demodulation using low pass filter of the amplified signal.

The fig shows the block diagram of class S amplifier as per the principle of the amplifier.

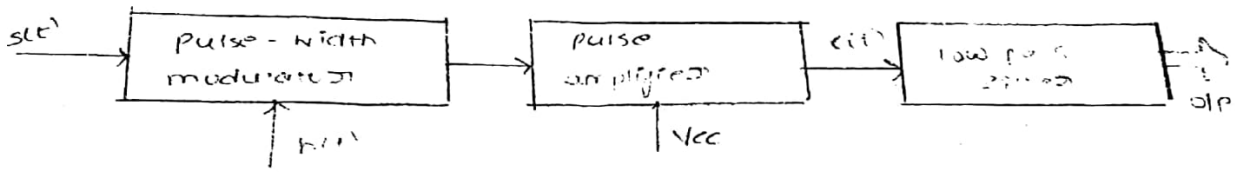


The input signal is pulse width modulated which generates constant amplitude pulses. These are amplified by pulse amplifier which is highly efficient switching amplifier like class D amplifier. The modulating frequency, as much highe than the signal frequency is completely removed using the low pass filter at the last stage.

The basic difference between class D and class 'S' amplifiers is that the output stage of the class D uses tuned circuit which is tuned to the fundamental frequency of the input while the output stage of class 'S' uses the low pass filter which passes the input signal.

## Class 'S' Power Amplifier

The basic principle of class S amplifier includes the following operations.

1. The input is pulse-width modulated signal
2. The pulses are amplified by high efficiency pulse amplifier like class D amplifier.
3. The demodulation using low pass filter of the amplified signal.

The fig shows the block diagram of class S amplifier as per the principle of the amplifier.

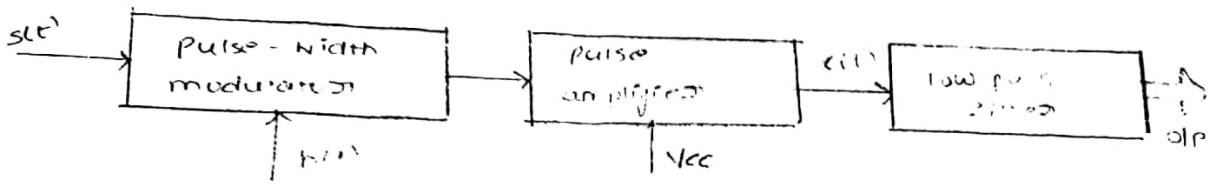


The input signal is pulse width modulated which generates constant amplitude pulses. These are amplified by pulse amplifier which is highly efficient switching amplifier like class D amplifier. The modulating frequency, as much higher than the signal frequency is completely removed using the low pass filter at the last stage.

The basic difference between class D and class 'S' amplifiers is that the output stage of the class D uses tuned circuit which is tuned to the fundamental frequency of the input while the output stage of class 'S' uses the low pass filter which passes the input signal.

Scanned by CamScanner